PRODUCT SHEET

Description:
Door Bar Handle Lock ø35x1500mm W/Cylinder+Knob, SS-304 Brushed, W/Dust Free Floor Socket, F/8-12mm Glass,W/5 Metal, Keys, 5000 KD, cc:1125mm, Cylinder Hole ø19mm & Bottom Hole, ø13mm. Latch Size: 40mm.

Item number:
14.60.600-0

Units	Box	Carton	HS Code	Barcode
Set	1	6	8301401100	5704866052313

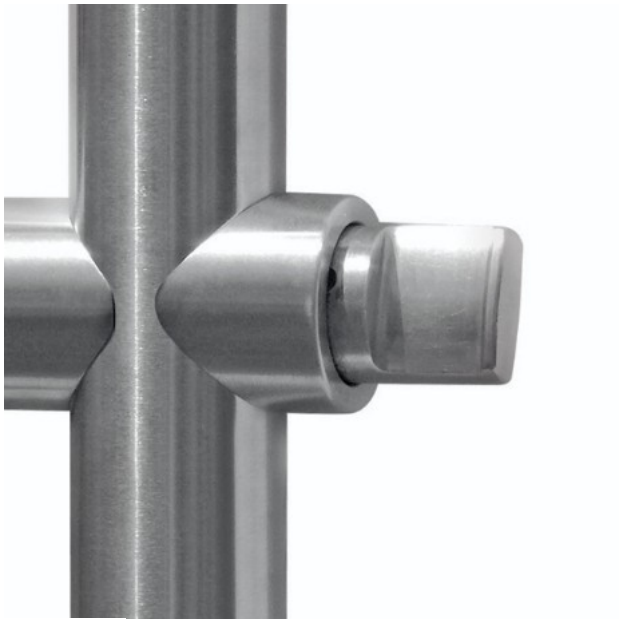

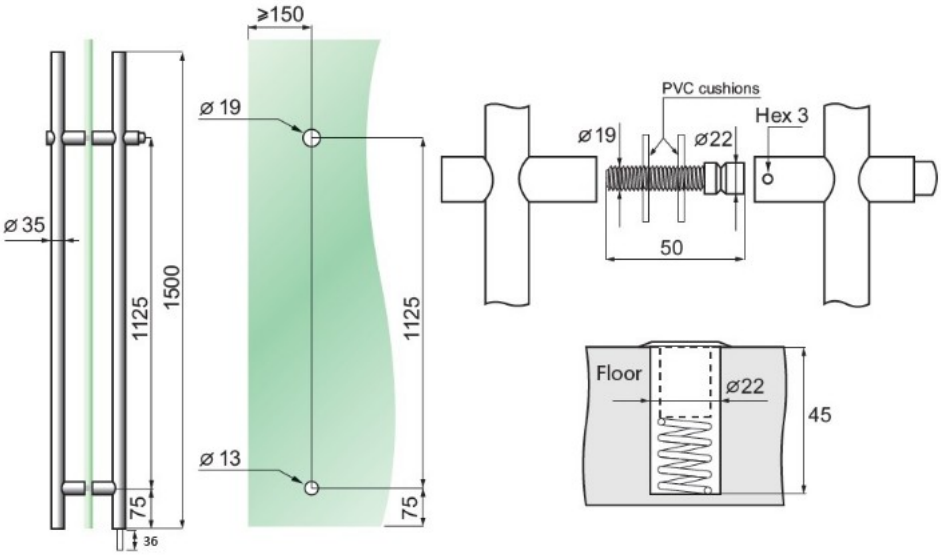

SISO A/S
Mileparken 11
DK-2740 Skovlunde
Denmark
VAT: DK 24786013

Phone +45 45 830 900

www.siso.dk
siso@siso.dk

Danske Bank
Nytorv Branch
Copenhagen
SWIFT: DABADKKK

Account no.
4180 3112 112936
IBAN Account
DK7230003112112936